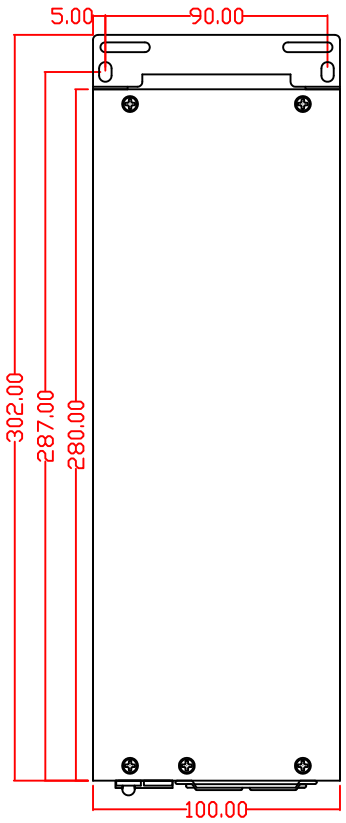

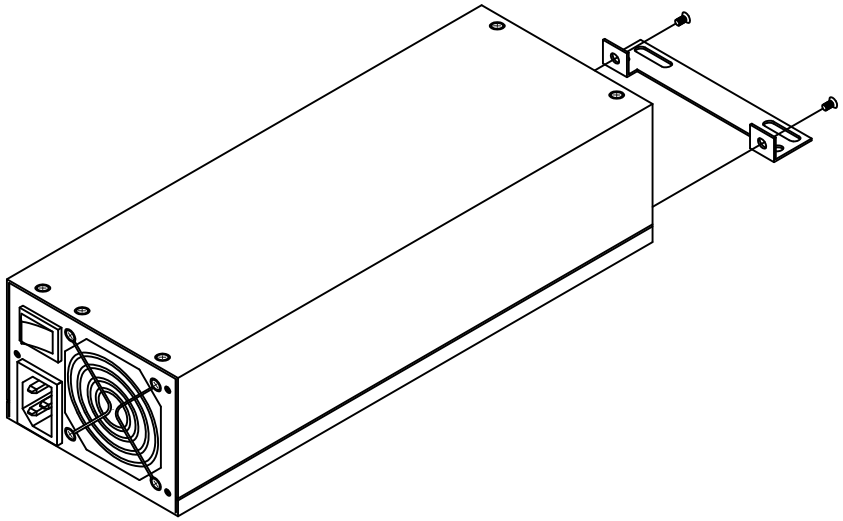

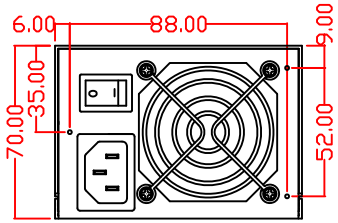

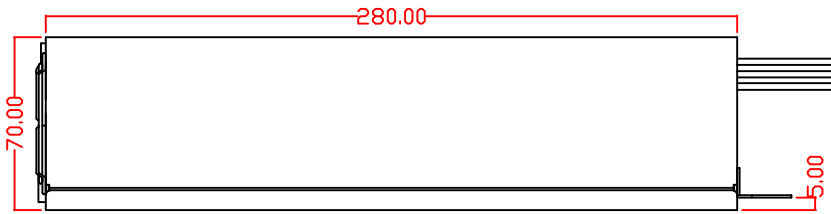

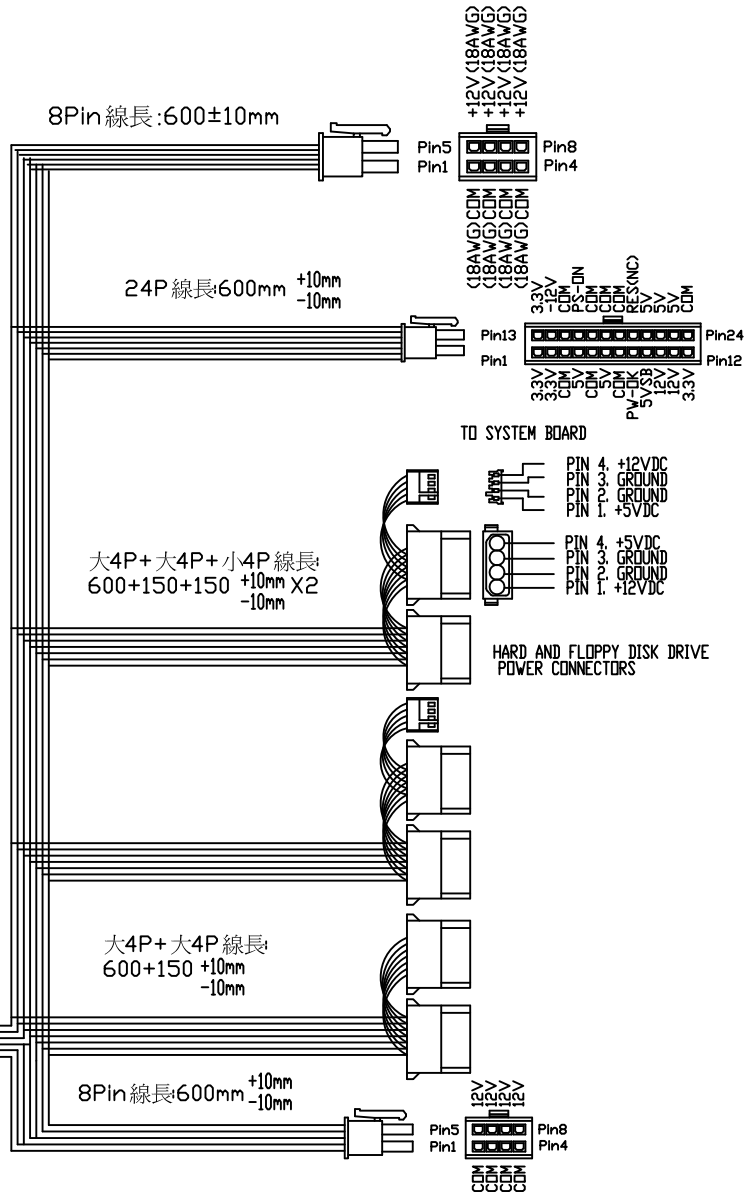

BEST POWER SOLUTION INC.			MTL SPEC:	UNSPECIFIED TOL'S:	
PROJ:		SCALE:		X.XX ±0.1	
FILE NO. 460SP/2U		TITLE: 2U single Intel	APP		
			CHK		
MODEL:	UNIT: mm	SHEET: 1/1 REV.	DGN		
			DRW	93.8.3	Andy