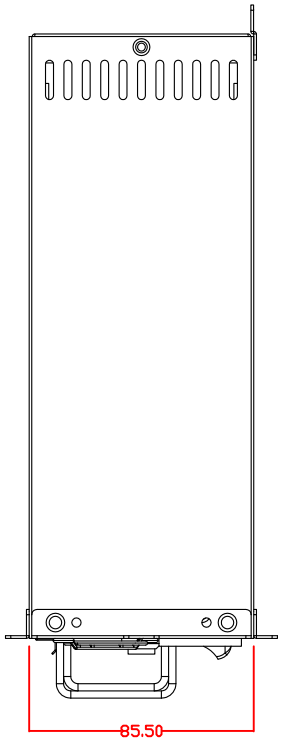

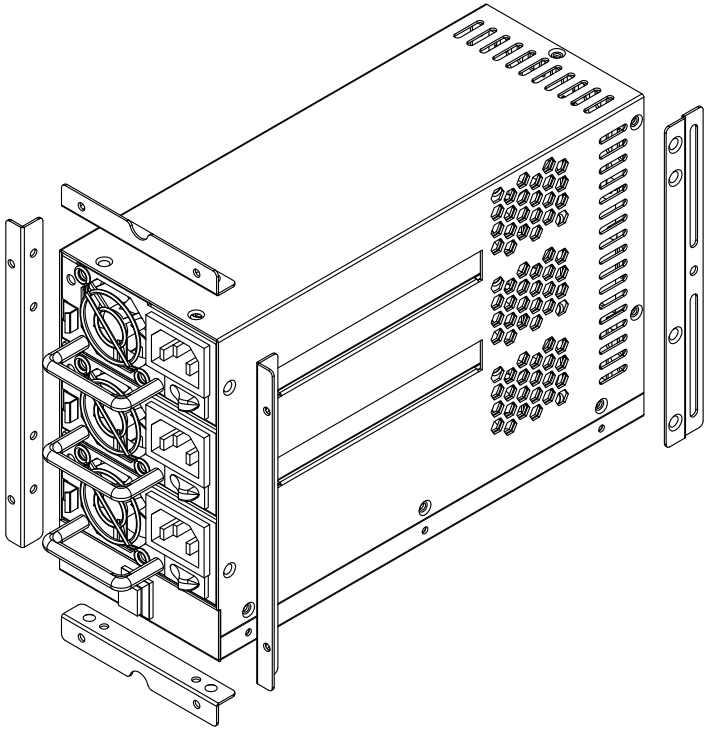

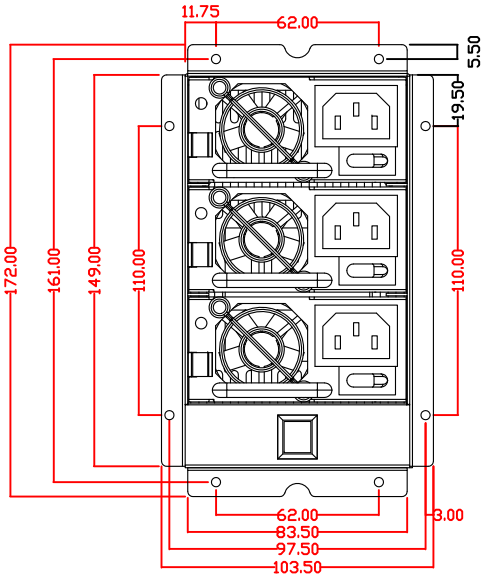

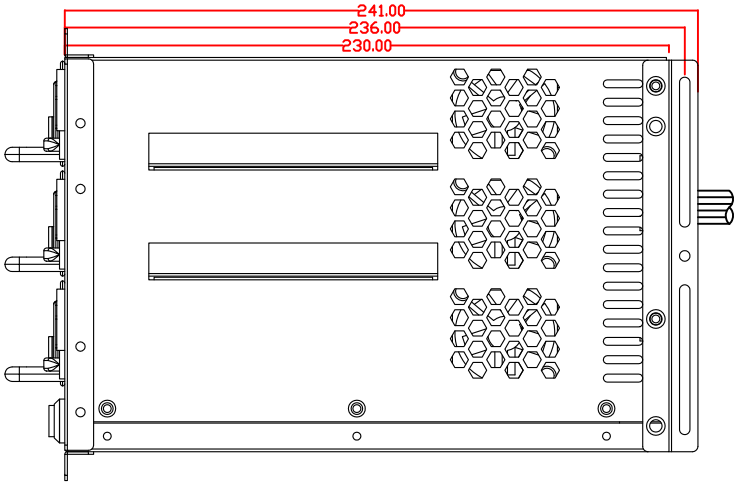

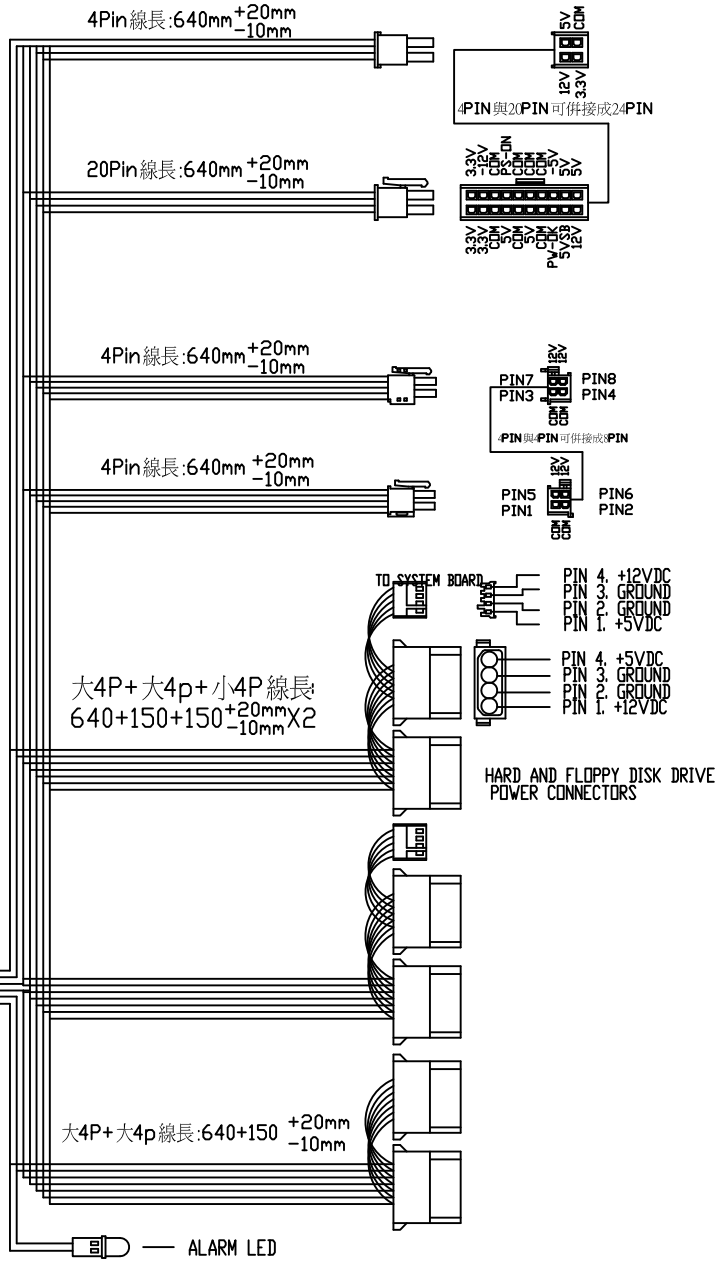

BEST POWER SOLUTION INC.			MTL SPEC:	UNSPECIFIED TOL'S: 0-10 ±0.1; 10-30 ±0.15; 30-150 ±0.2; 150-250 ±0.25	
PROJ:		SCALE:			
FILE NO. BPS-700RP3 / 800PR3 / 900RP3		TITLE: 4U REDUNDANT	APP		
			CHK		
MODEL:	UNIT: mm	SHEET: 1/1	REV. 1/1	DGN	
				DRW 97.2.13	JEss