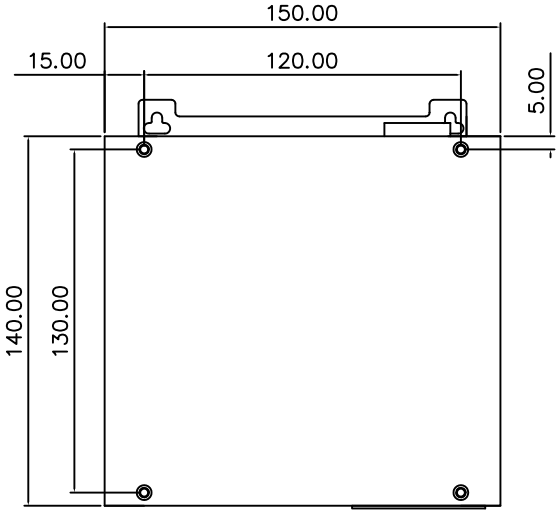

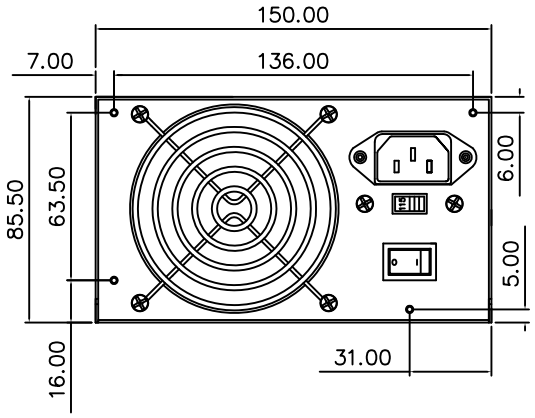

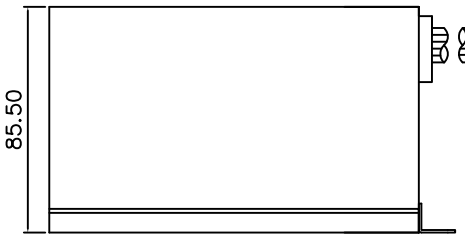

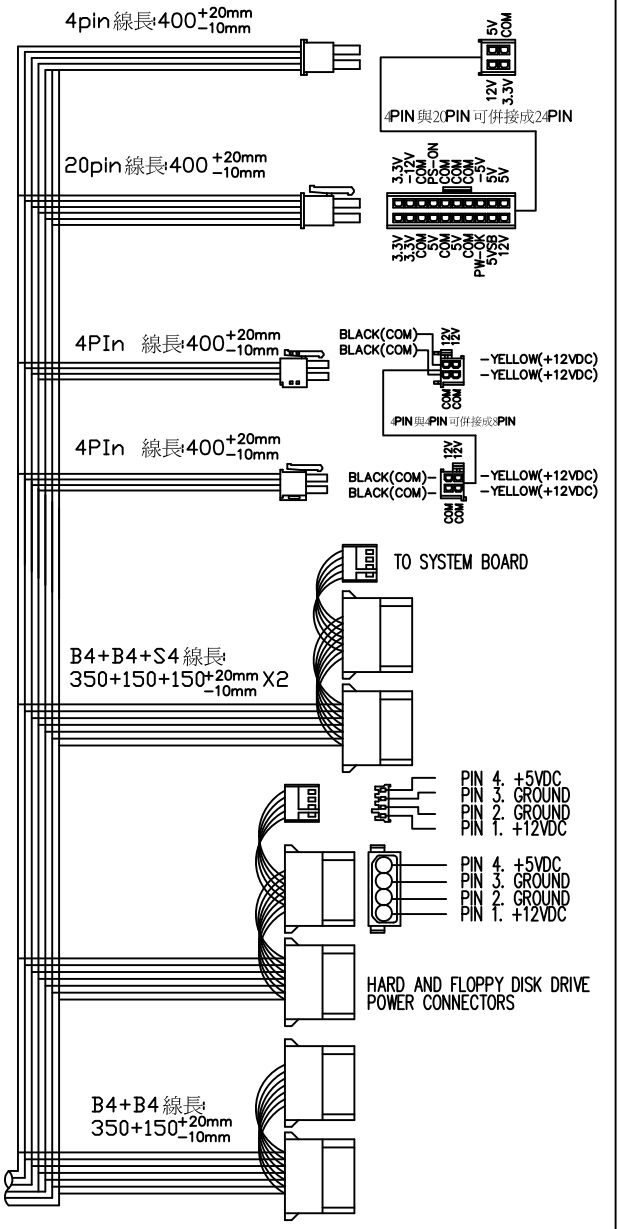

*以上線長皆爲外露線長

BPS Best Power Solution.,Inc		
Size C	Document Number BPS−400SP−NEW	REV
Date :	Sheet 1 of 1	